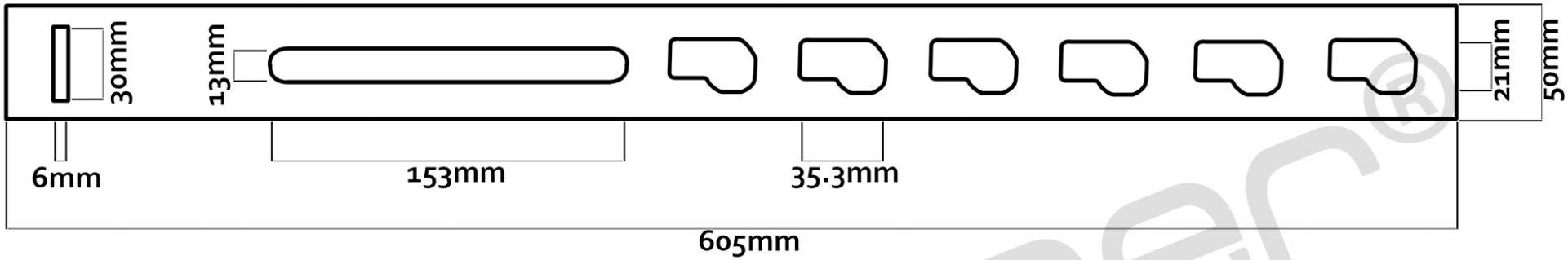
30mm
13mm
21mm
50mm
6mm
153mm
35.3mm
605mm

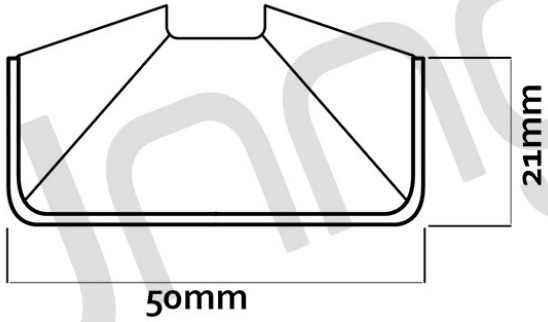
21mm
50mm

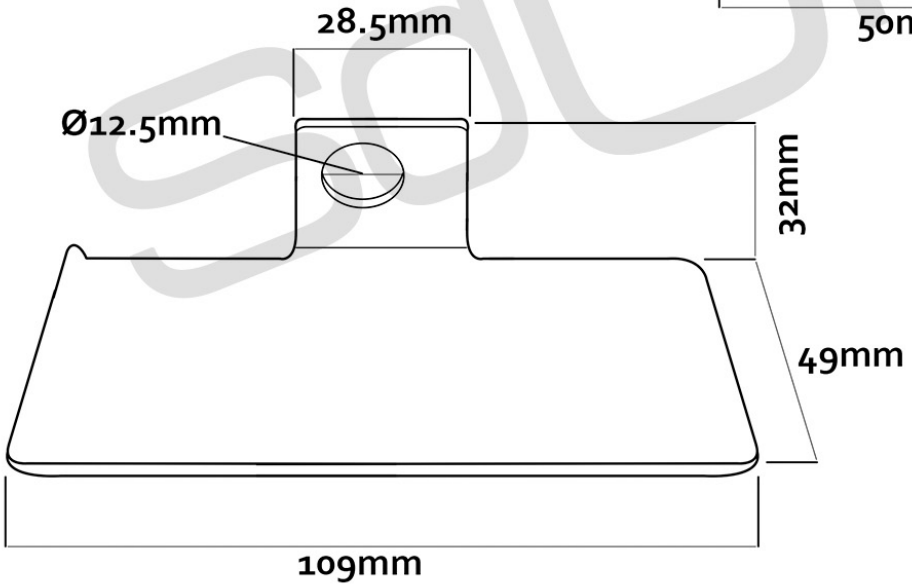
28.5mm
Ø12.5mm
32mm
49mm
109mm

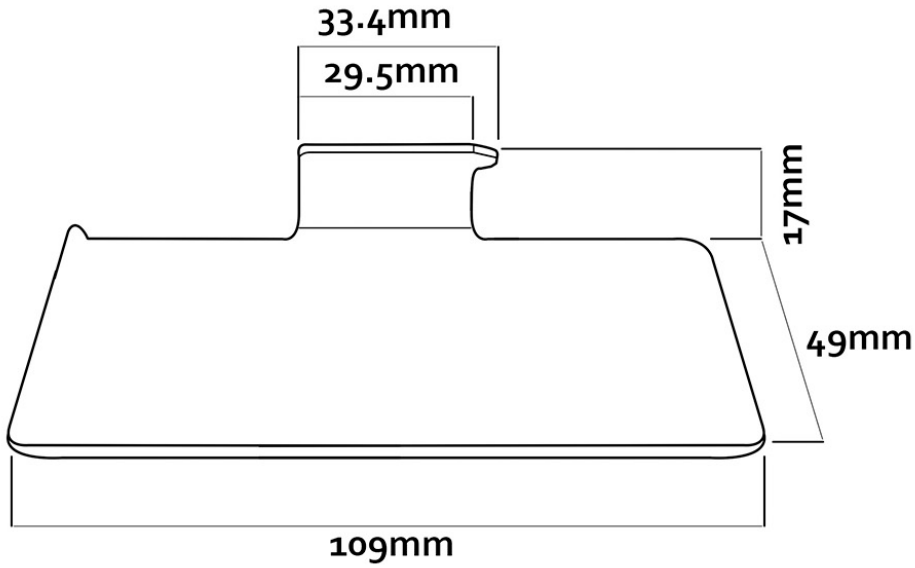
33.4mm
29.5mm
17mm
49mm
109mm

solUnger®